SAGINAW CONTROL & ENGINEERING
SCE-MOD847718

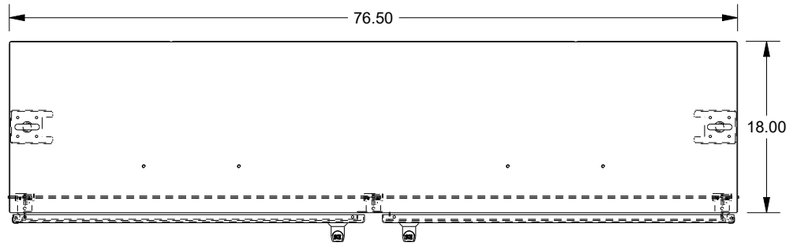

TOP VIEW

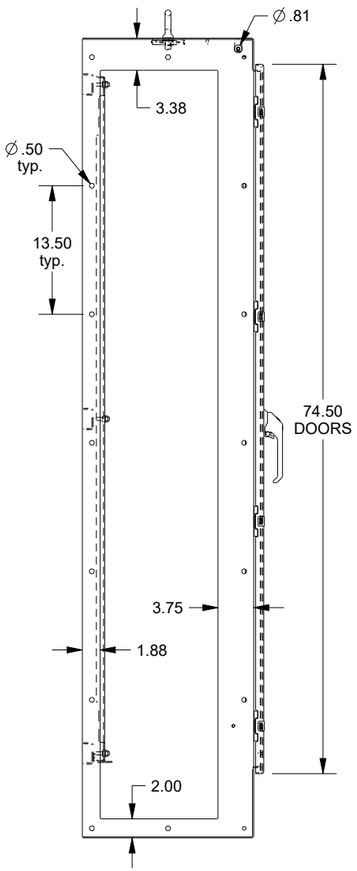

LEFT SIDE VIEW

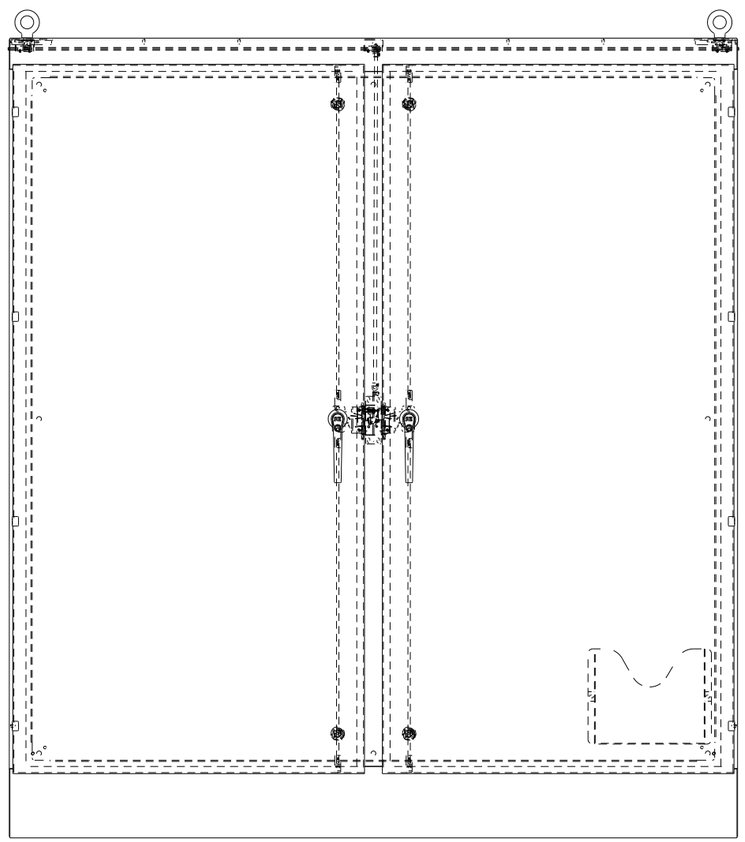

FRONT VIEW

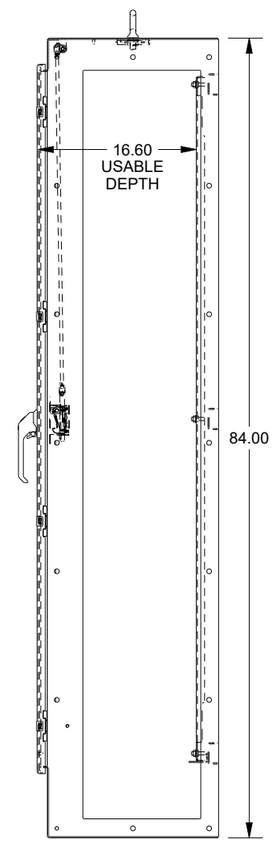

RIGHT SIDE VIEW

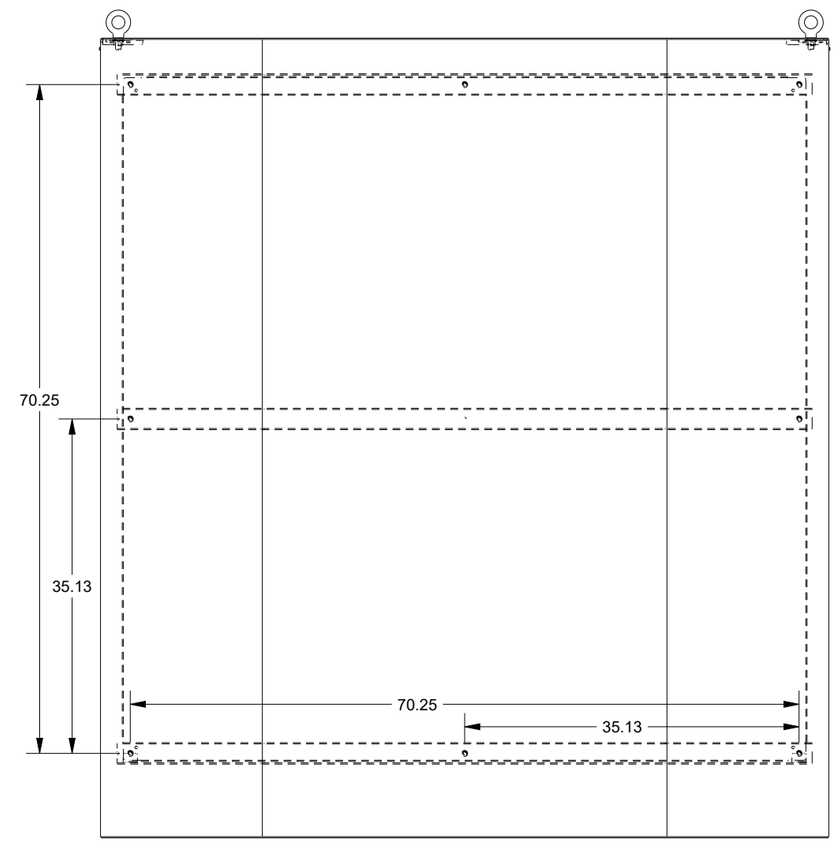

EXTERNAL REAR VIEW

WASH SYSTEM 2" SQUARE DRAIN HOLES
IN THE BOTTOM WITH UL APPROVED
HOLE SEALS PROVIDED

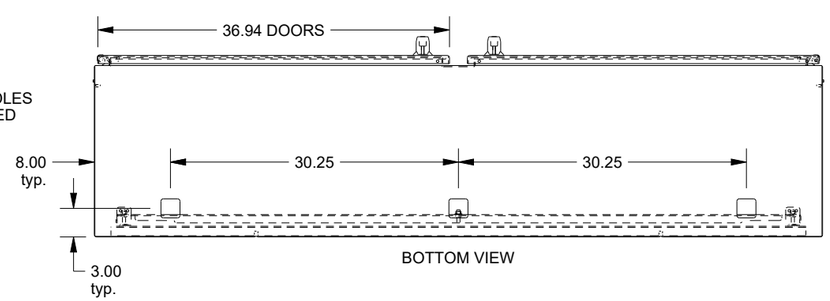

BOTTOM VIEW

DATA SUBJECT TO CHANGE WITHOUT NOTICE