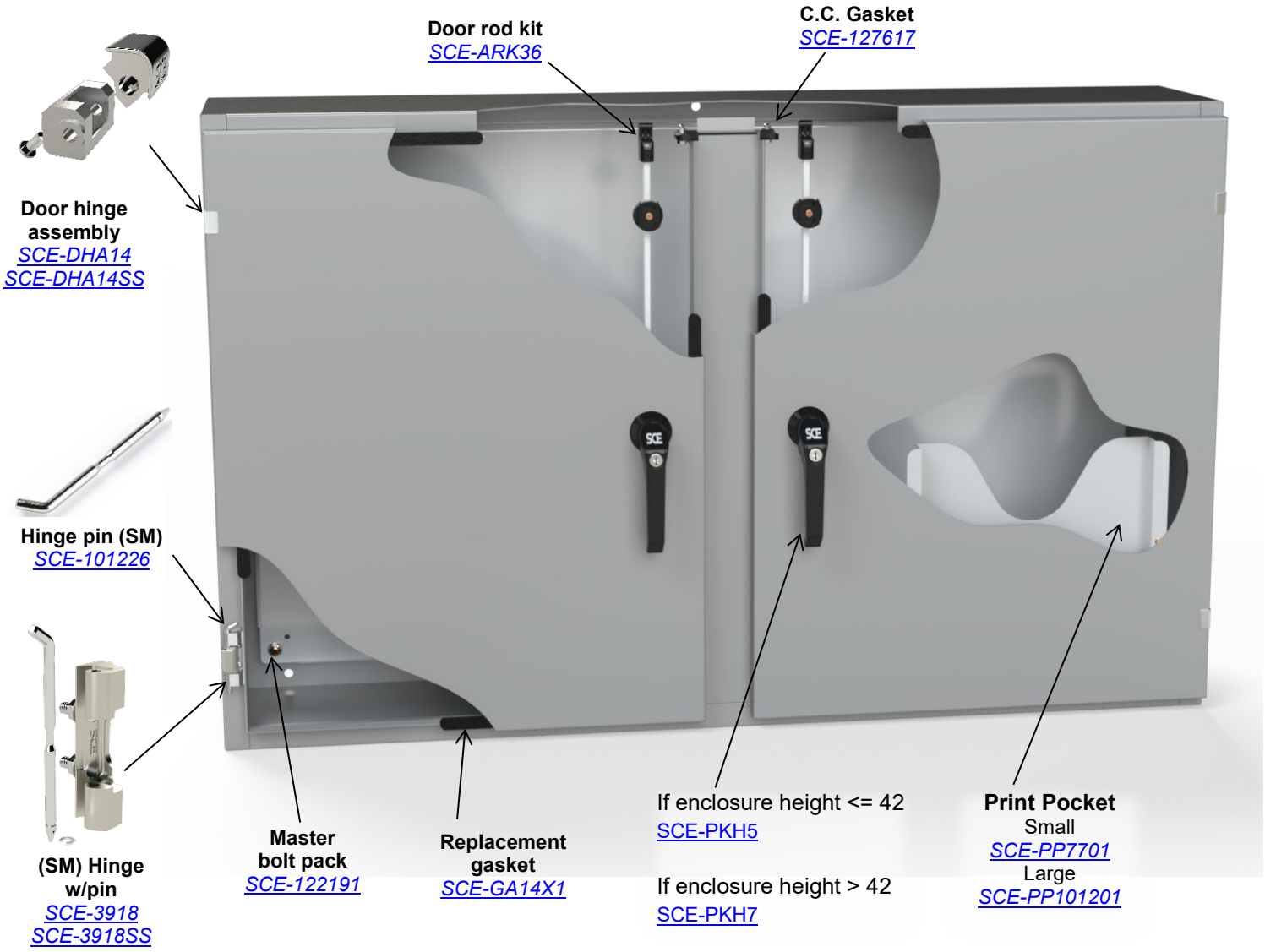ENVIROLINE SERIES WALL MOUNT TWO-DOOR ENCLOSURES WITH 3 POINTS HARDWARE – SERVICE PARTS