SAGINAW CONTROL & ENGINEERING
SCE-60XEL3716LP12 = SCE-09 GRAY
SCE-60XEL3716LP12LG = RAL 7035

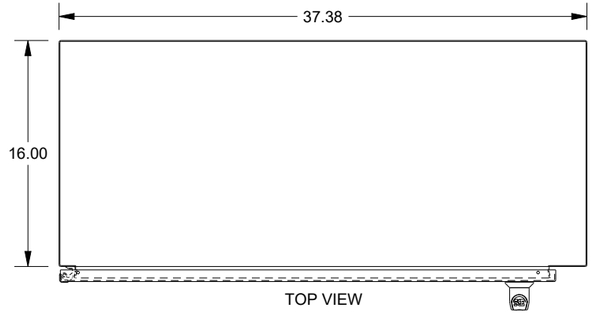

TOP VIEW

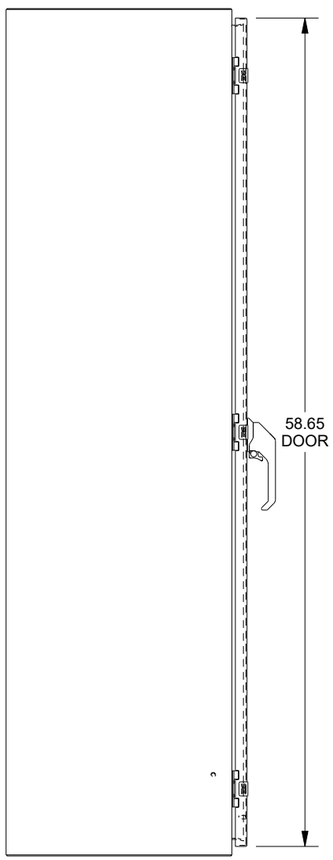

LEFT SIDE VIEW

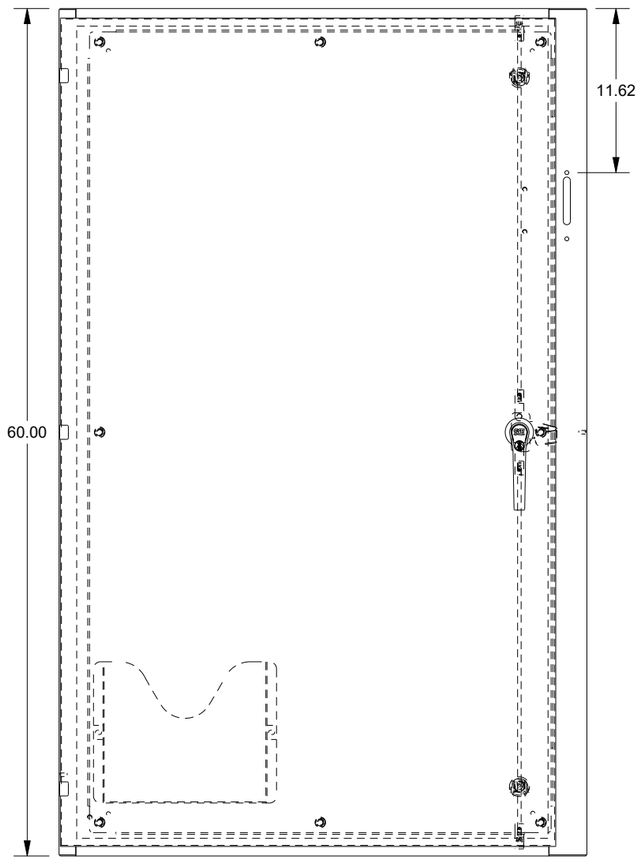

FRONT VIEW

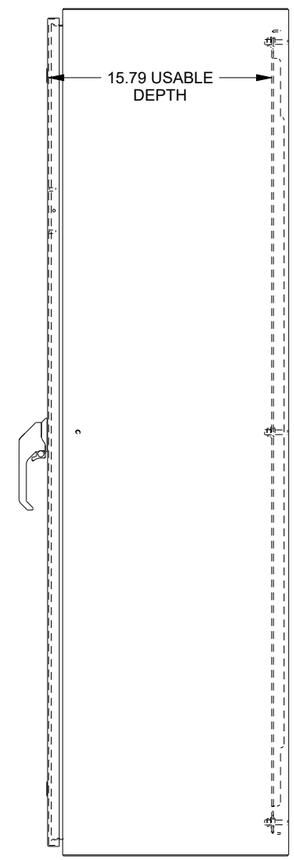

RIGHT SIDE VIEW

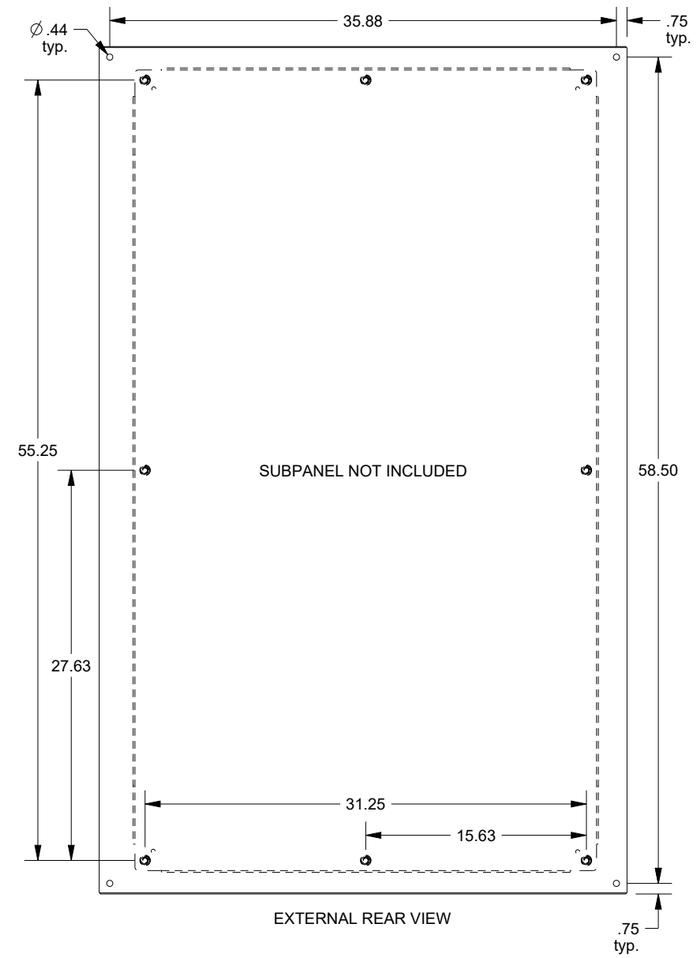

EXTERNAL REAR VIEW

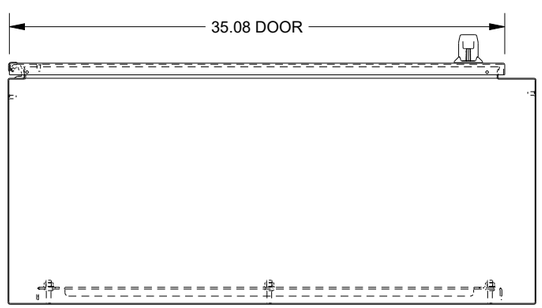

BOTTOM VIEW

DATA SUBJECT TO CHANGE WITHOUT NOTICE