SAGINAW CONTROL & ENGINEERING
SCE-GP08

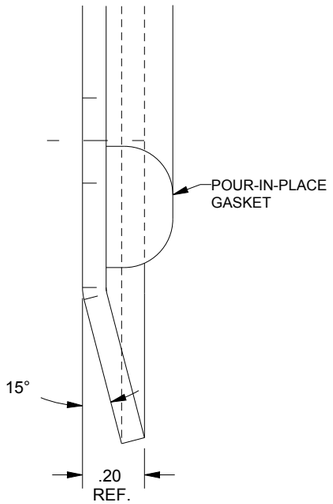

SECTION W-W
SCALE 2.000

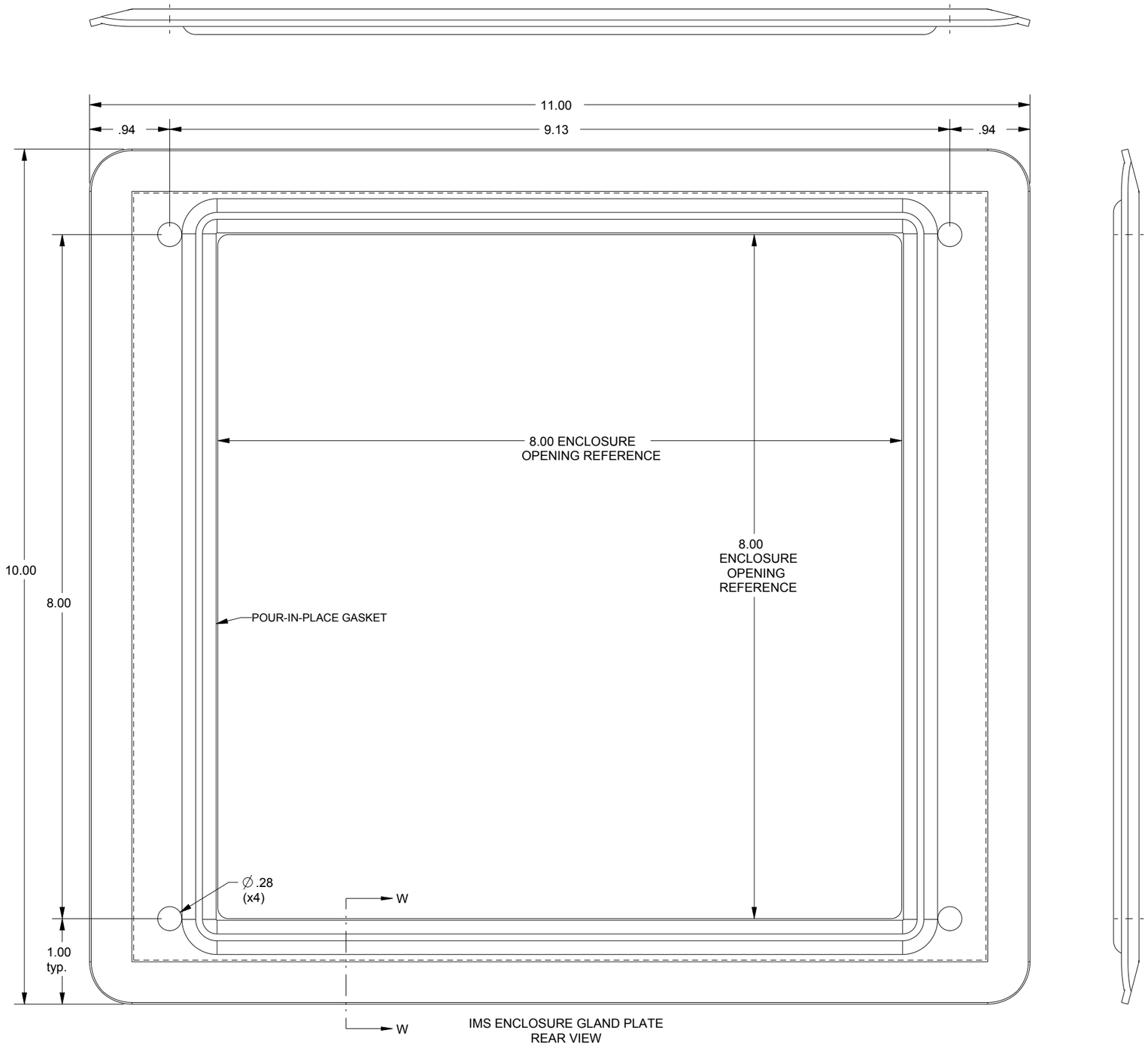

IMS ENCLOSURE GLAND PLATE
REAR VIEW

DATA IS SUBJECT TO CHANGE WITHOUT NOTICE