SAGINAW CONTROL & ENGINEERING
SCE-ELFM12HSS

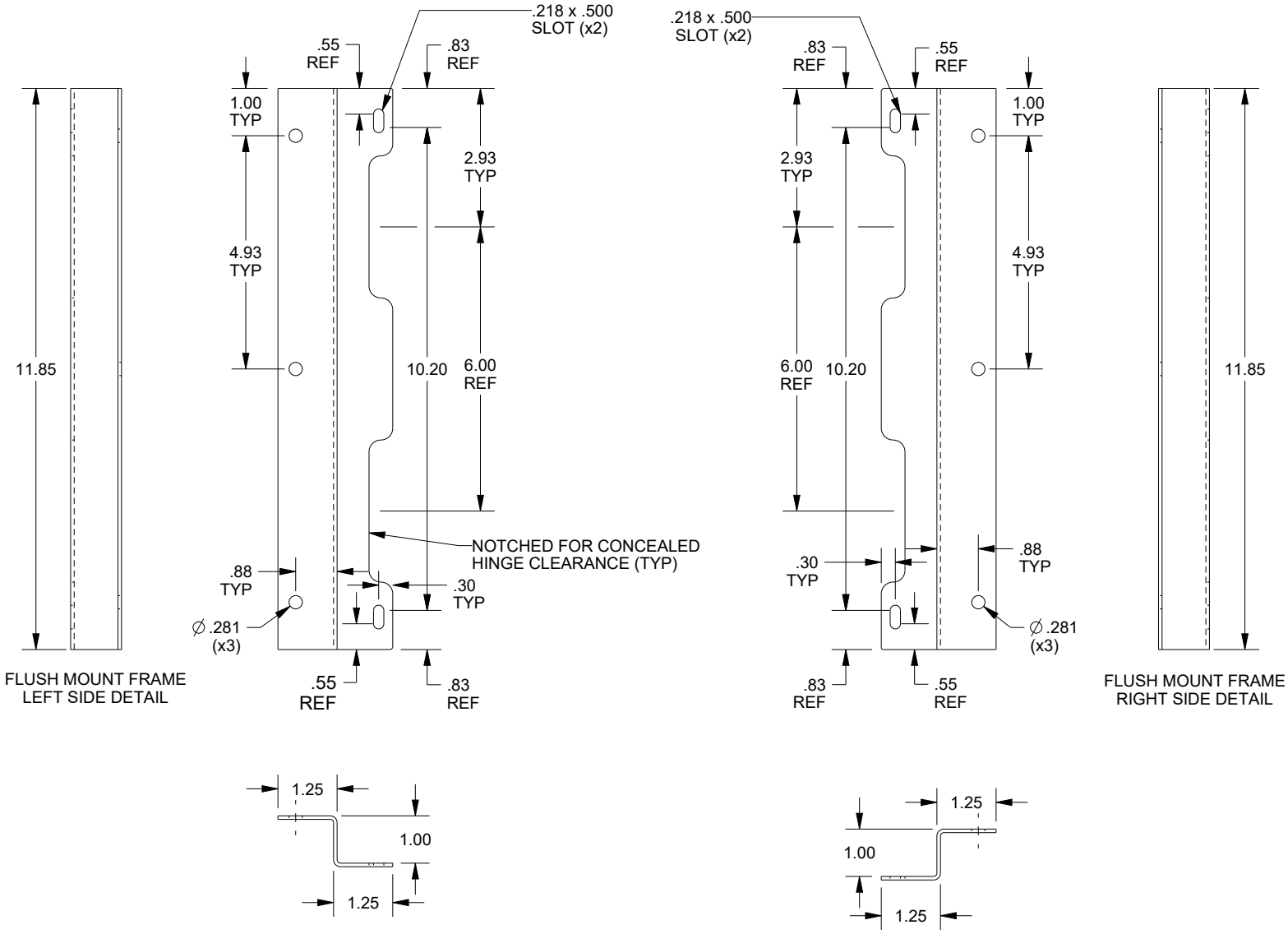

DATA SUBJECT TO CHANGE WITHOUT NOTICE