SAGINAW CONTROL & ENGINEERING
SCE-72EL3024FS

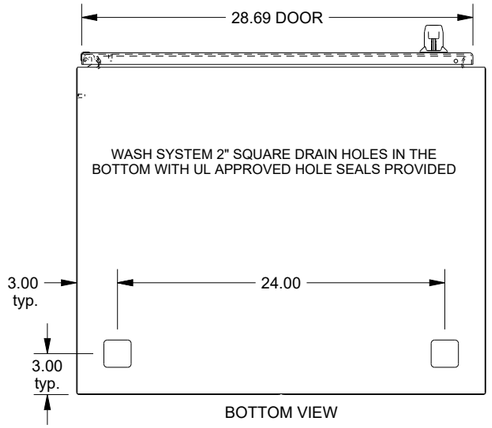

BOTTOM VIEW

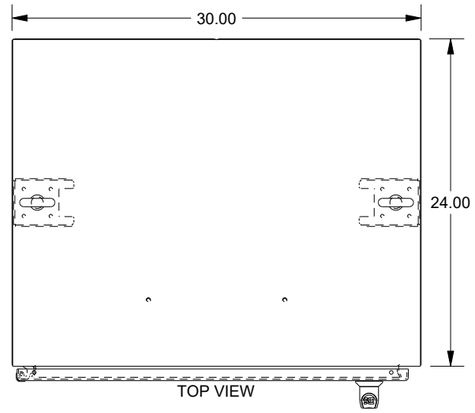

TOP VIEW

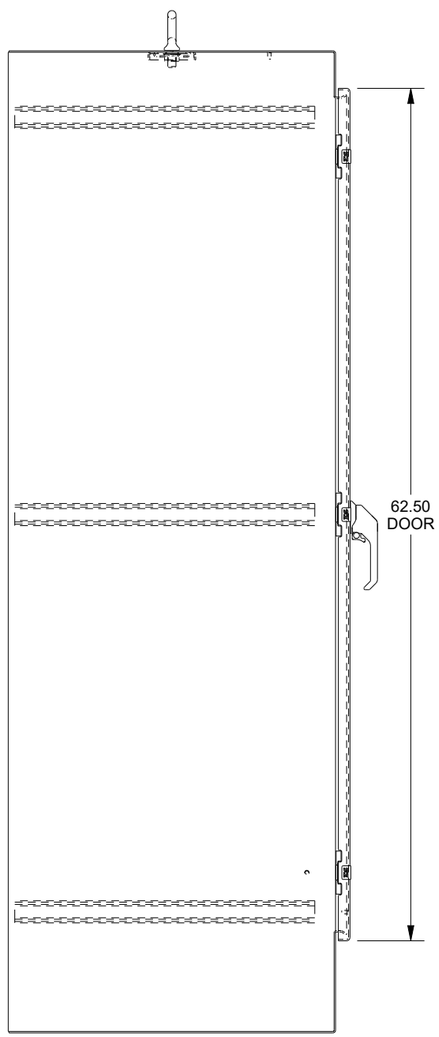

LEFT SIDE VIEW

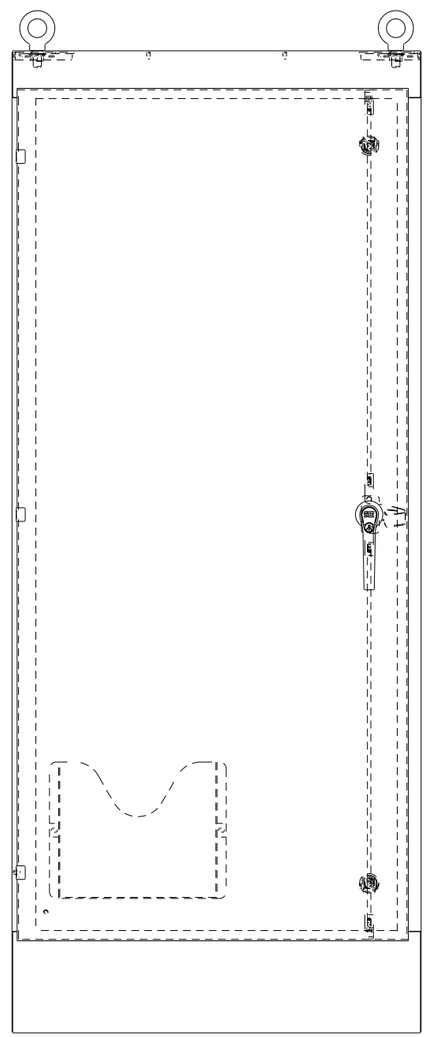

FRONT VIEW

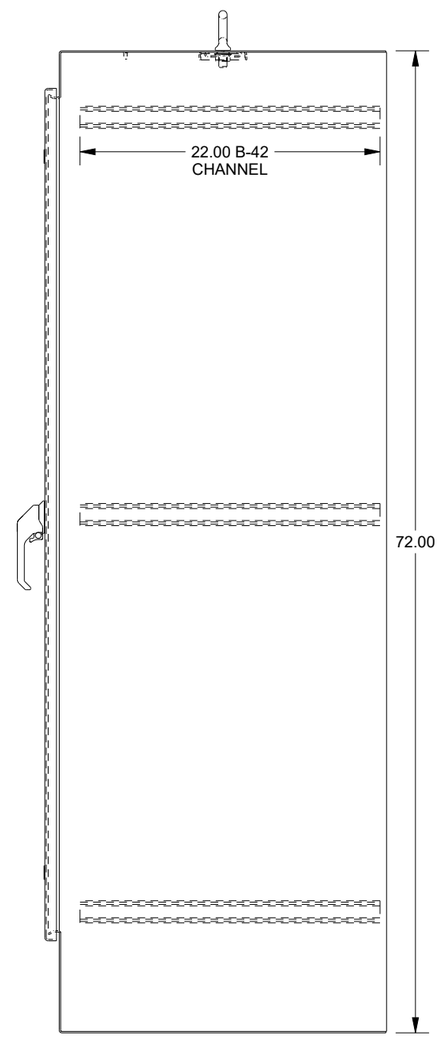

RIGHT SIDE VIEW

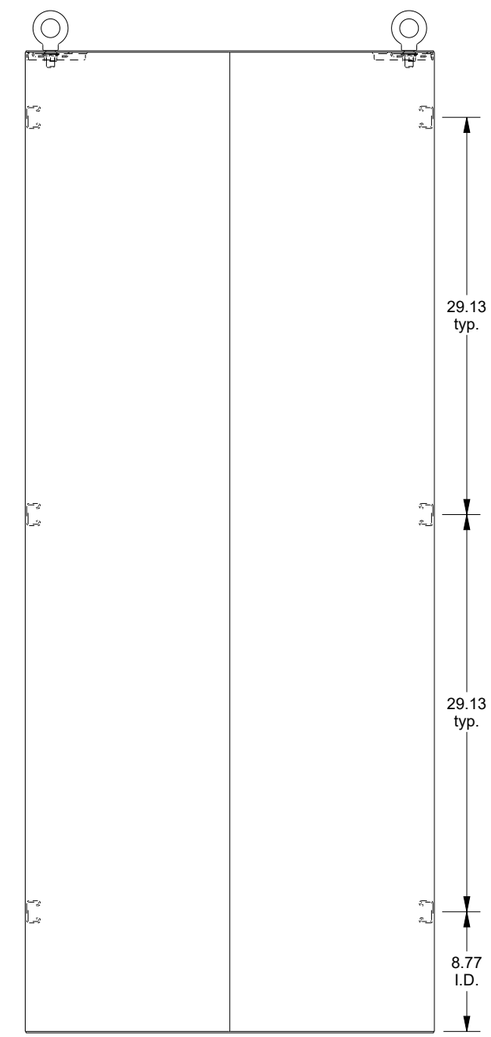

EXTERNAL REAR VIEW

DATA SUBJECT TO CHANGE WITHOUT NOTICE