# SAGINAW CONTROL & ENGINEERING
# SCE-604ELJSS6

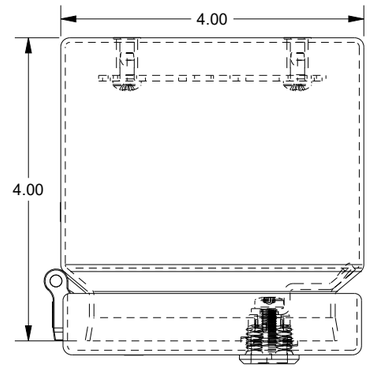


TOP VIEW

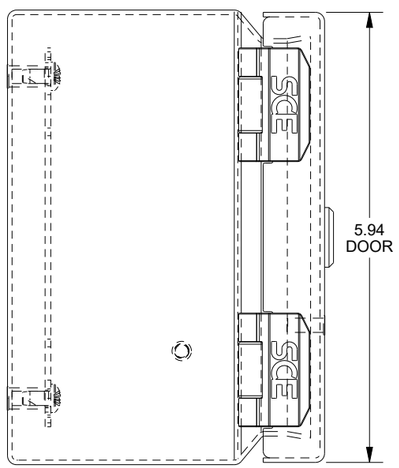


LEFT SIDE VIEW

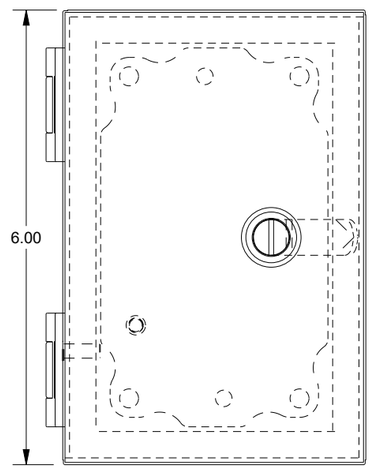


FRONT VIEW

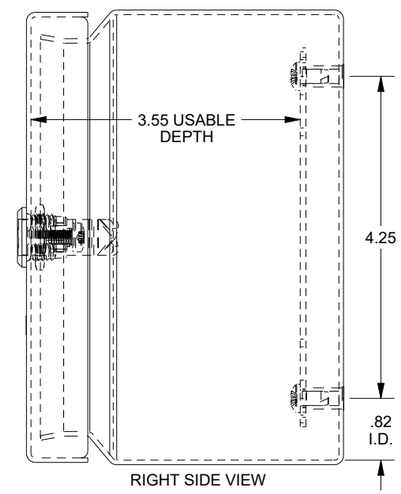


RIGHT SIDE VIEW

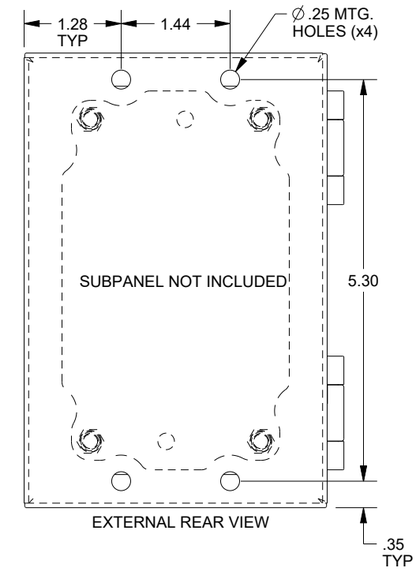


EXTERNAL REAR VIEW

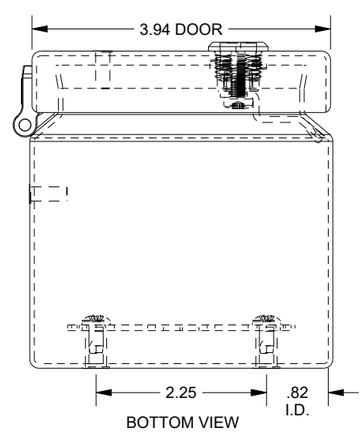


BOTTOM VIEW

DATA SUBJECT TO CHANGE WITHOUT NOTICE