SAGINAW CONTROL & ENGINEERING
SCE-4PB

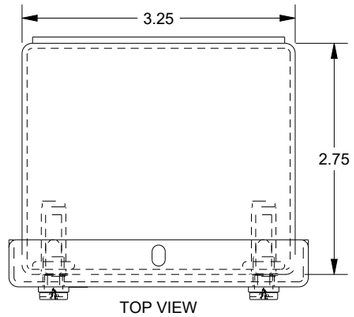

TOP VIEW

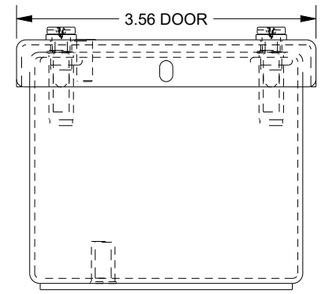

BOTTOM VIEW

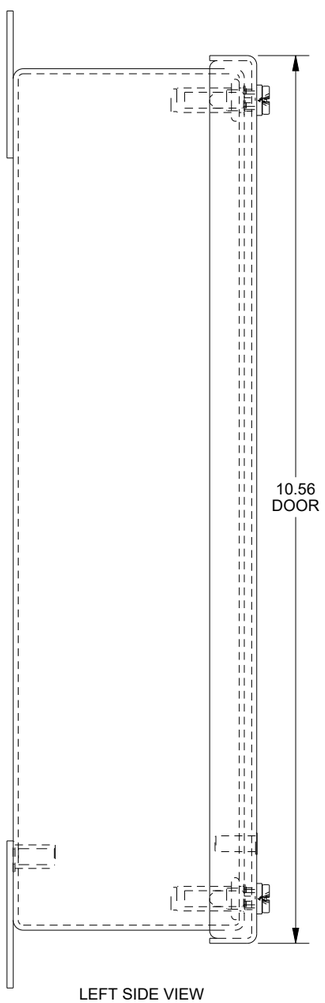

LEFT SIDE VIEW

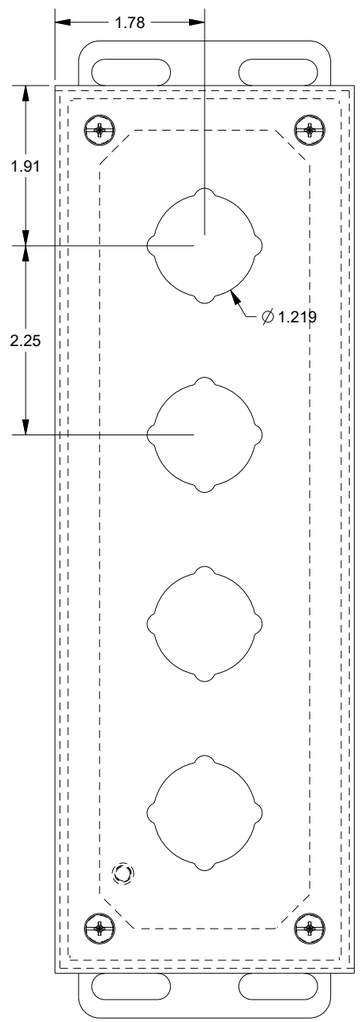

FRONT VIEW

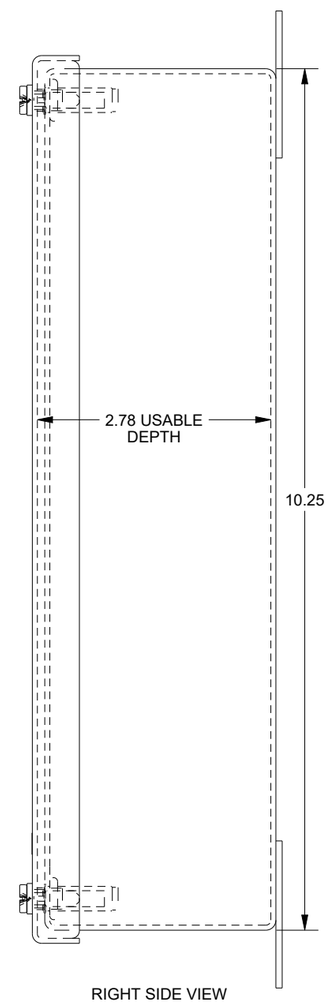

RIGHT SIDE VIEW

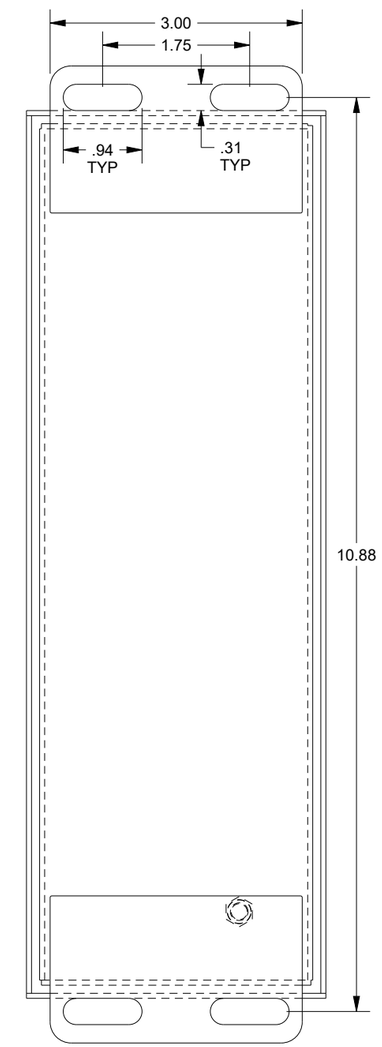

EXTERNAL REAR VIEW

DATA SUBJECT TO CHANGE WITHOUT NOTICE