SAGINAW CONTROL & ENGINEERING
SCE-4044SC

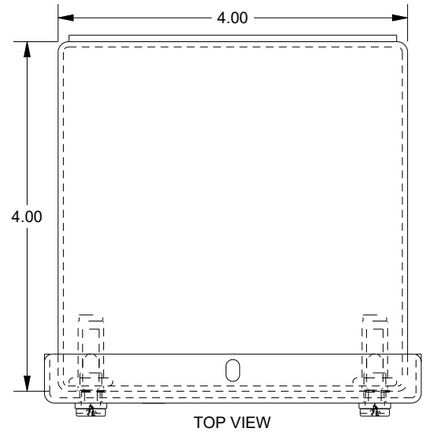

TOP VIEW

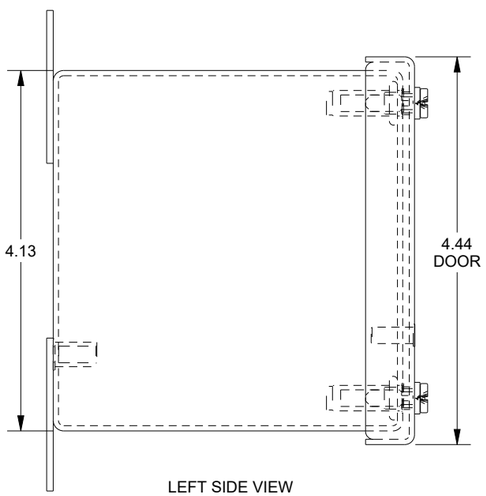

LEFT SIDE VIEW

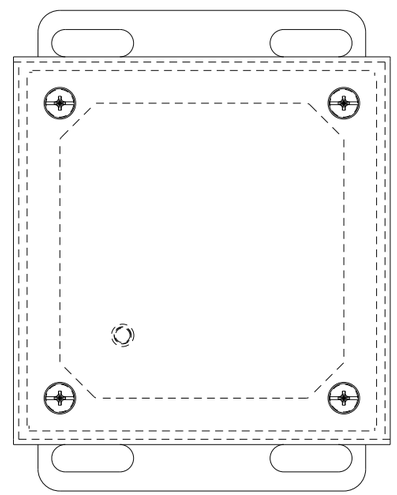

FRONT VIEW

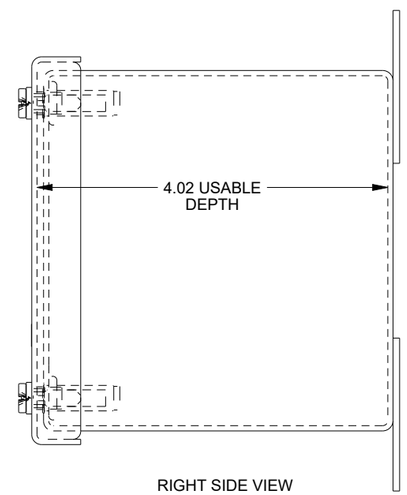

RIGHT SIDE VIEW

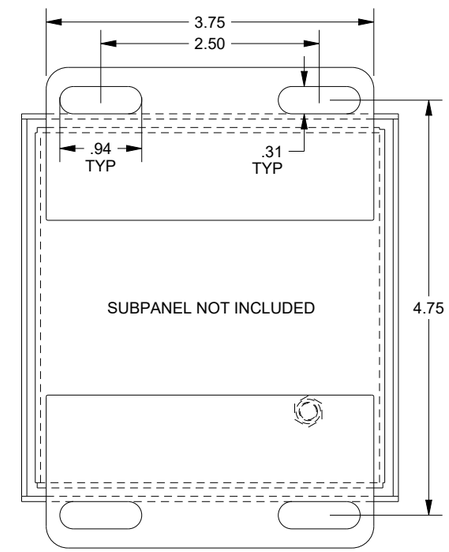

EXTERNAL REAR VIEW

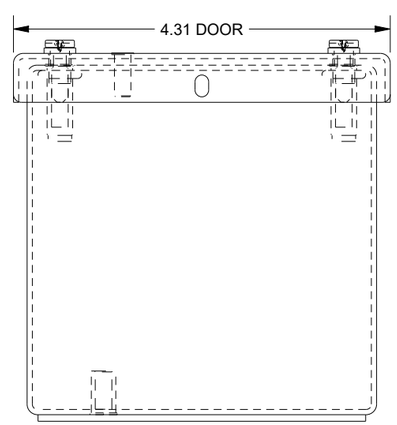

BOTTOM VIEW

DATA SUBJECT TO CHANGE WITHOUT NOTICE