SAGINAW CONTROL & ENGINEERING
SCE-16HMI2010LP

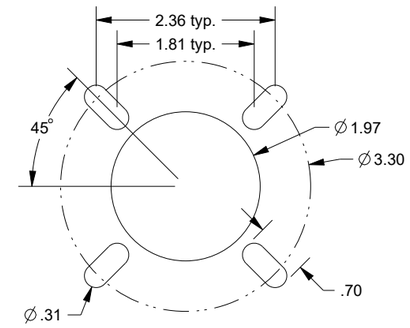

PENDANT SUSPENSION
PROVISIONS DETAIL
(NOT TO SCALE)

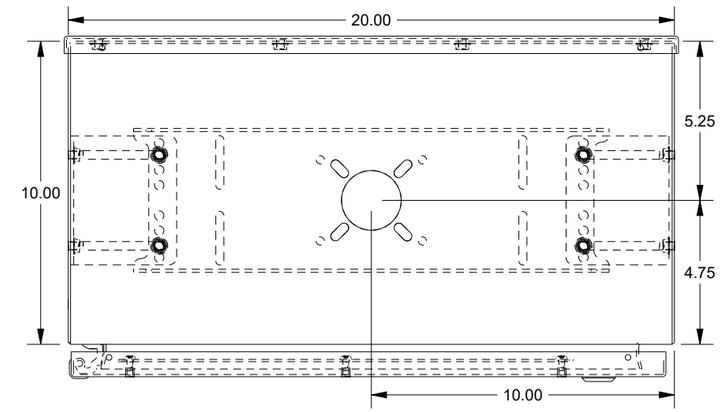

TOP VIEW

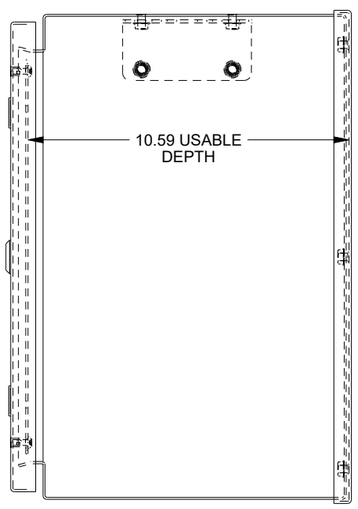

LEFT SIDE VIEW

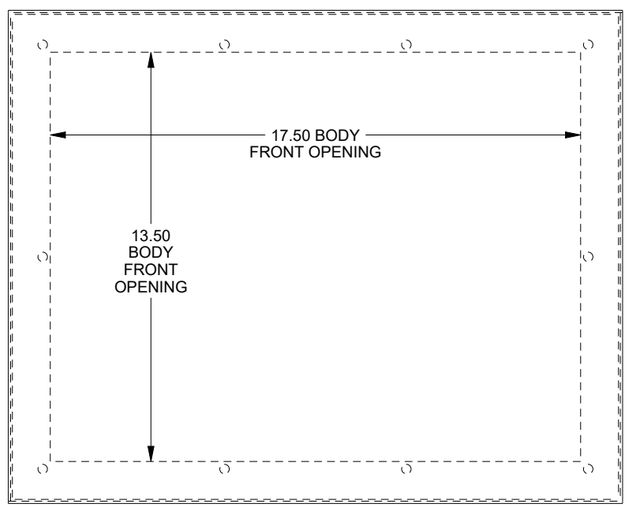

FRONT VIEW

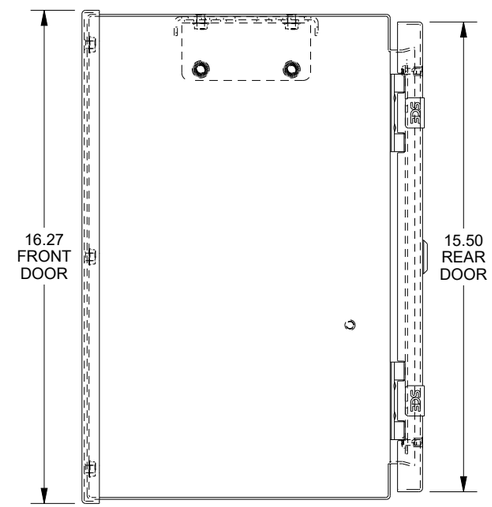

RIGHT SIDE VIEW

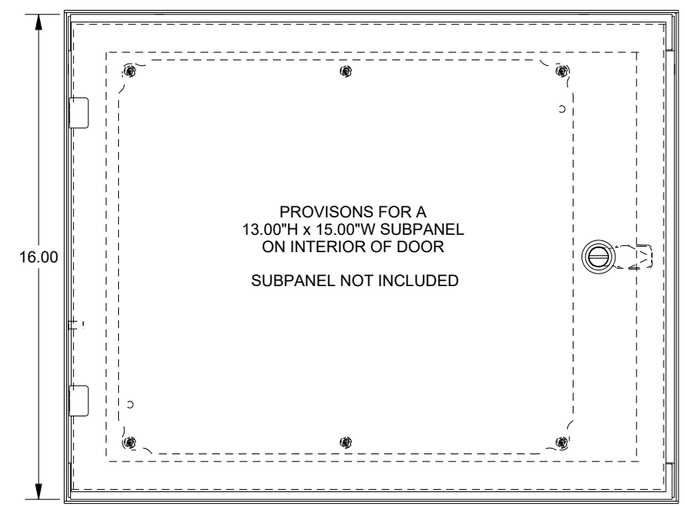

REAR VIEW

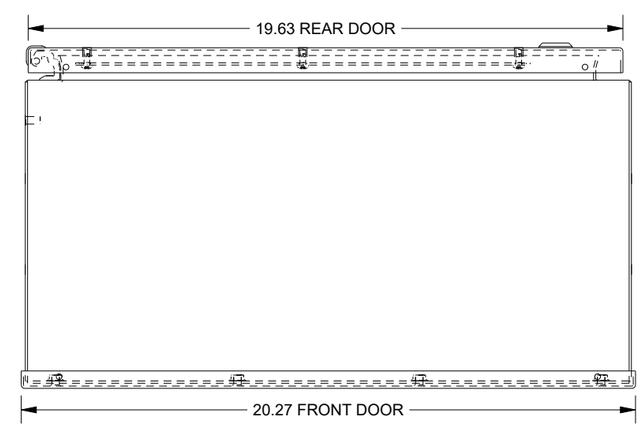

BOTTOM VIEW

DATA SUBJECT TO CHANGE WITHOUT NOTICE