SAGINAW CONTROL & ENGINEERING
SCE-10N1004NKLP

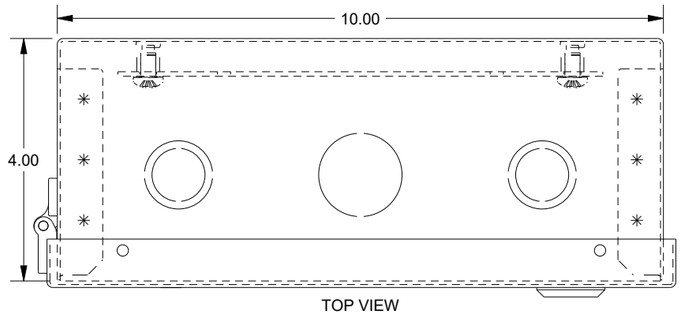

TOP VIEW

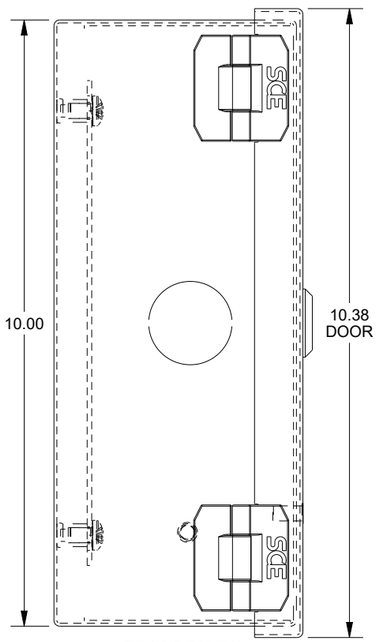

LEFT SIDE VIEW

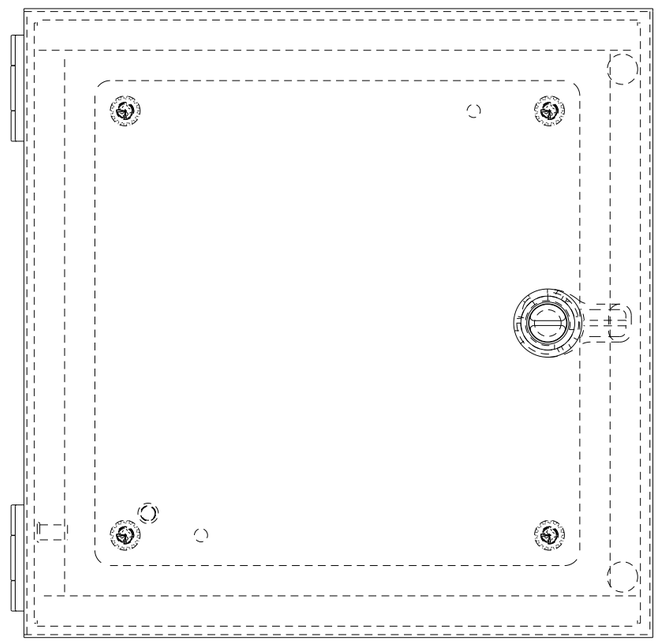

FRONT VIEW

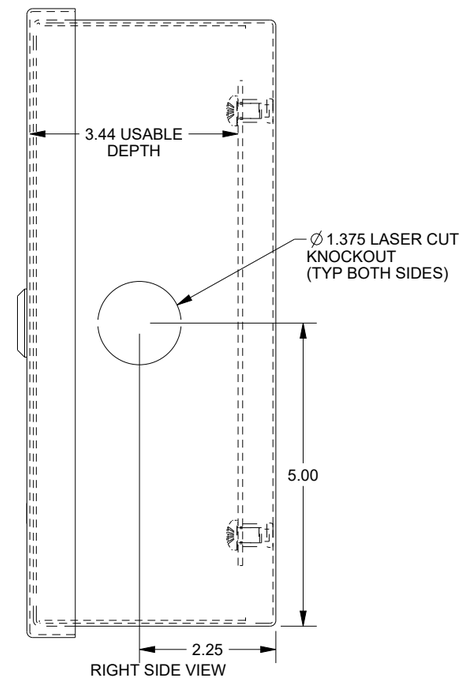

RIGHT SIDE VIEW

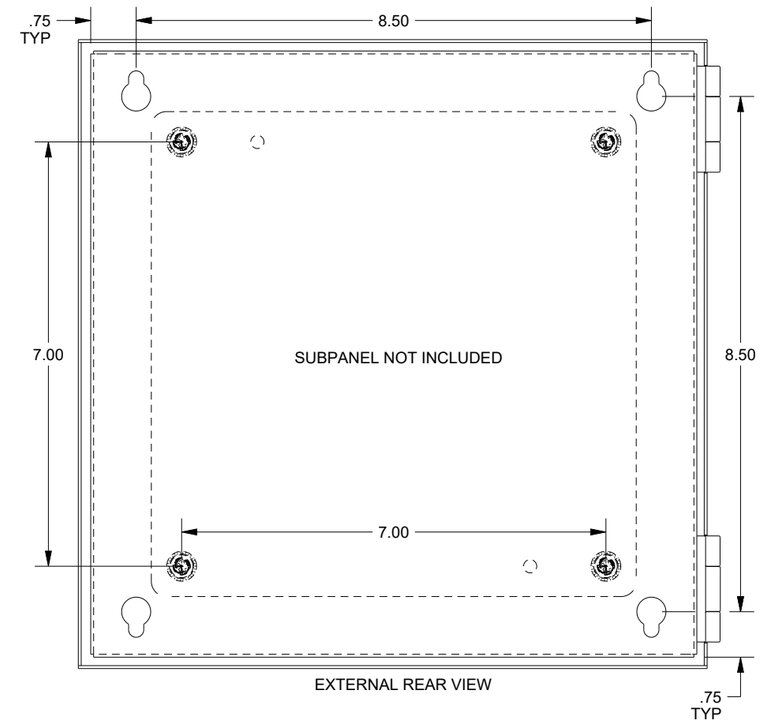

EXTERNAL REAR VIEW

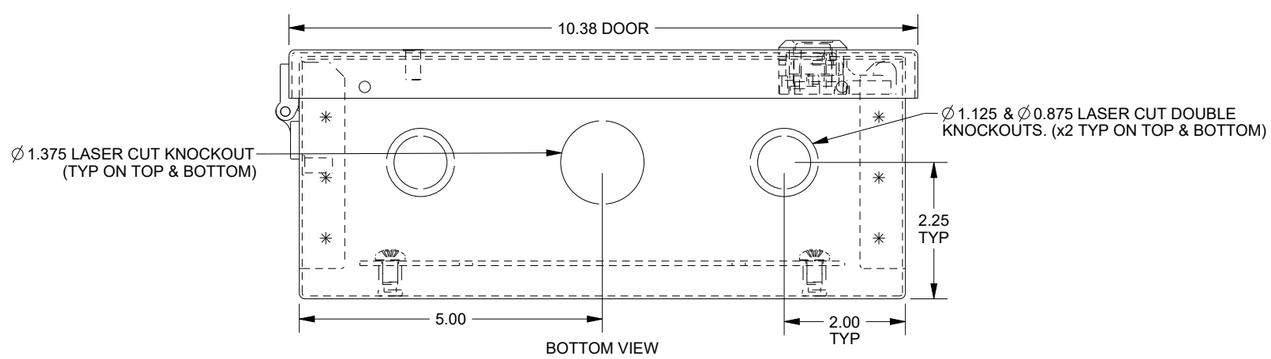

BOTTOM VIEW

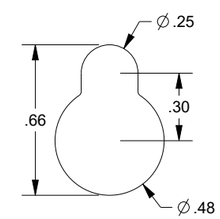

MOUNTING HOLE DETAIL
(4plcs.)

DATA SUBJECT TO CHANGE WITHOUT NOTICE