SAGINAW CONTROL & ENGINEERING
PNA186

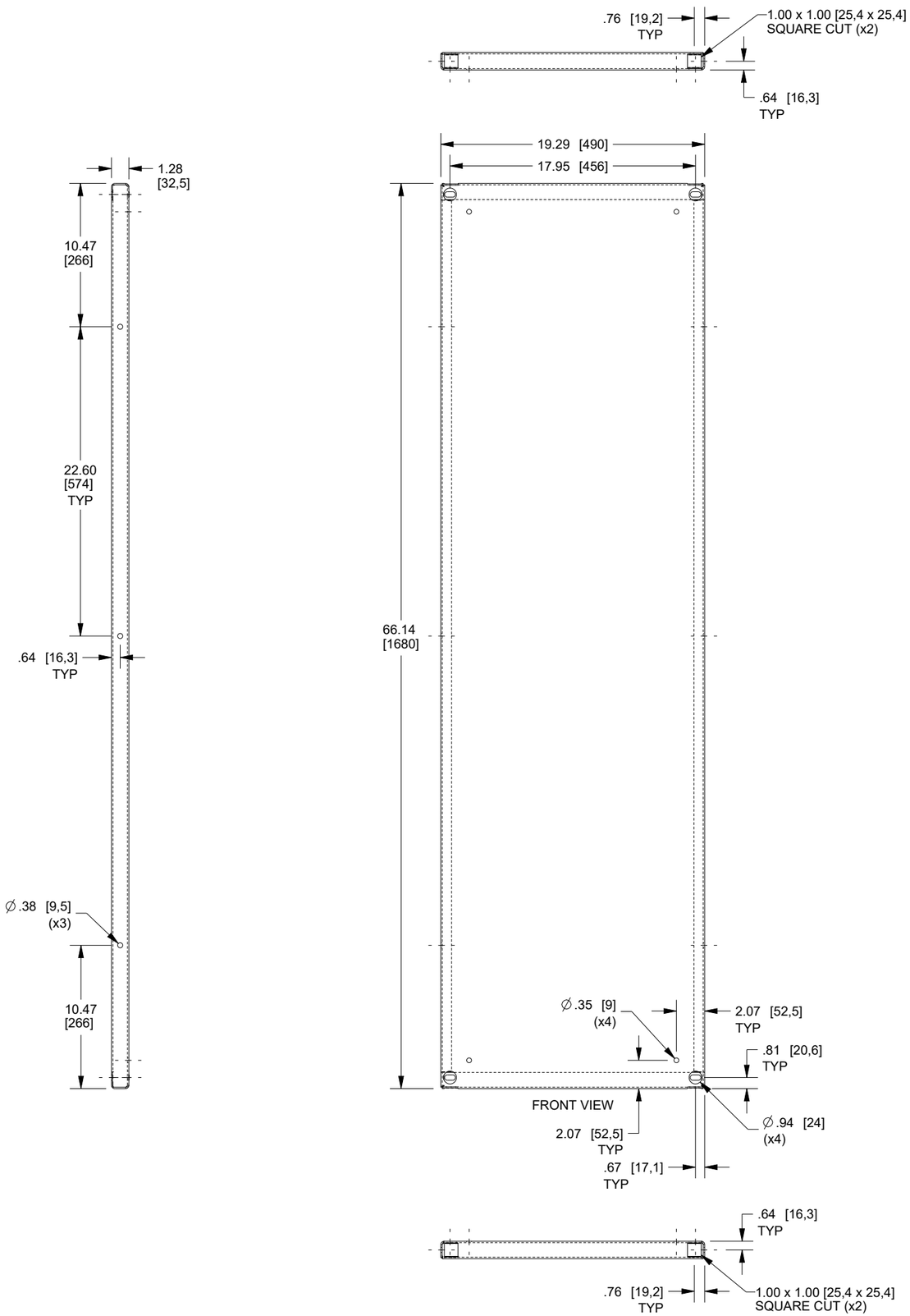

DATA SUBJECT TO CHANGE WITHOUT NOTICE