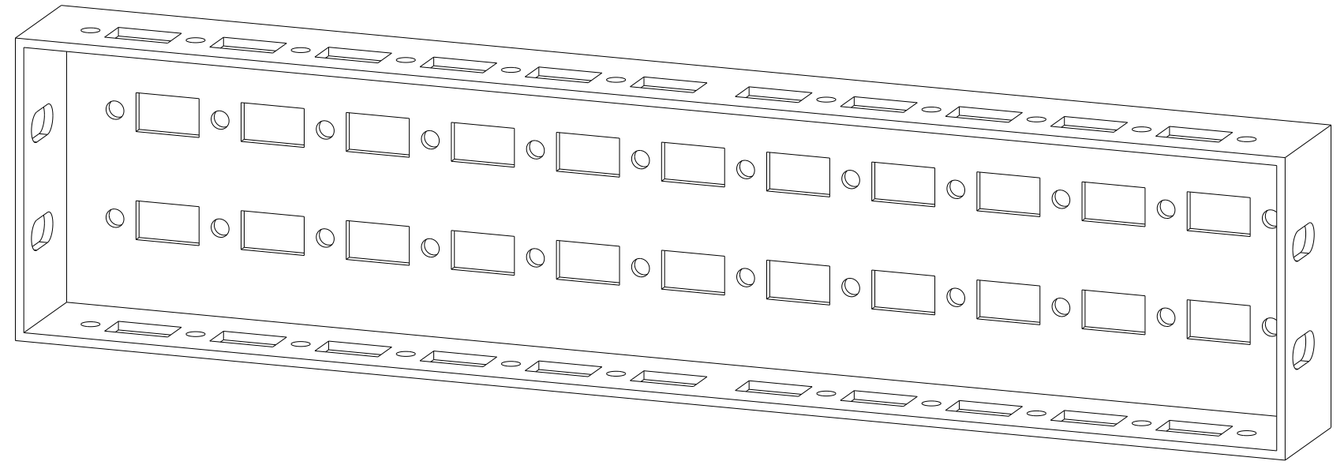

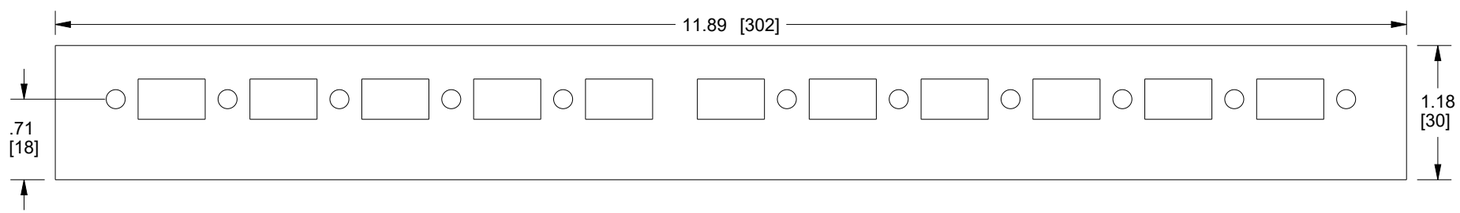

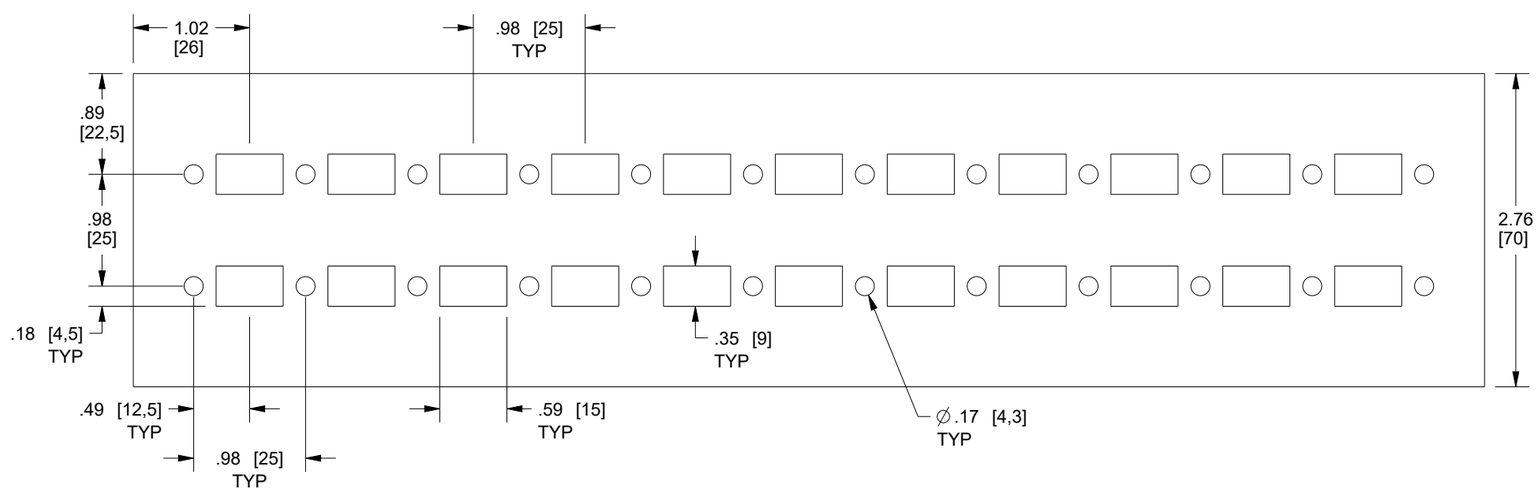

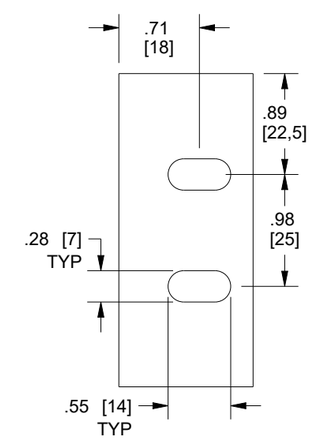

DESCRIPTION:
Modular Enclosure - Front/Side Mounting Profile - 2 Lines 400 x 70 mm - 3.00 X 16.00 X 2.00 - Galvanized Steel

DRAWN BY: Kajdan	CUSTOMER: SAGINAW CONTROL & ENGINEERING	
DATE: 04/21/25	PART NUMBER: DCK407	REV: --
0.075" GALVANIZED STEEL MATERIAL UNLESS SPECIFIED	CUSTOMER I.D.: SCE2	Your Enclosure Source®
PAINT SPECIFICATION REFER TO ORDER CONFIRMATION	SHEET: 1 OF 1	